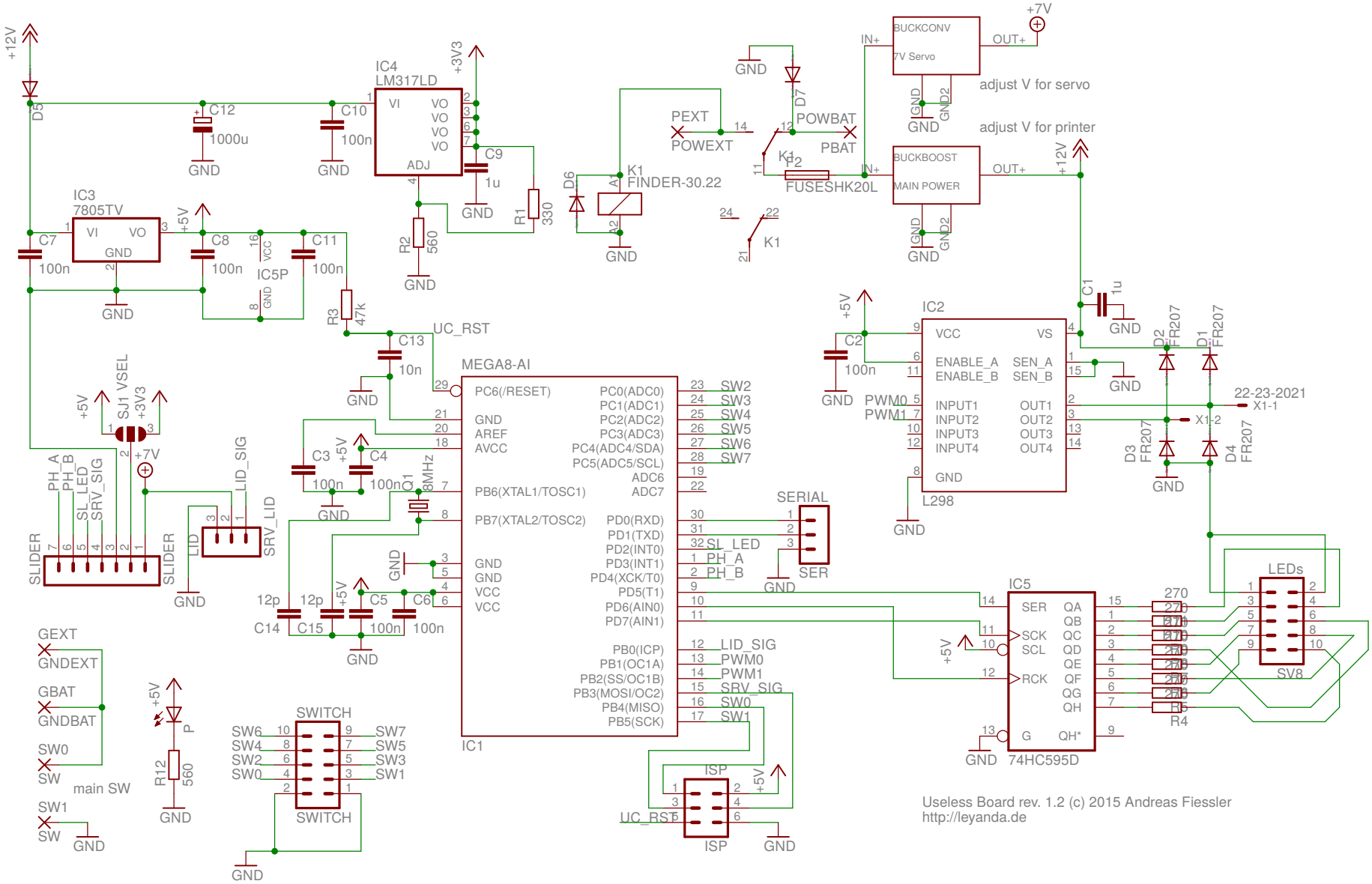

22.01.16 18:41 /home/elephant/microc/useless/pcb/useless_board.sch (Sheet: 1/1)